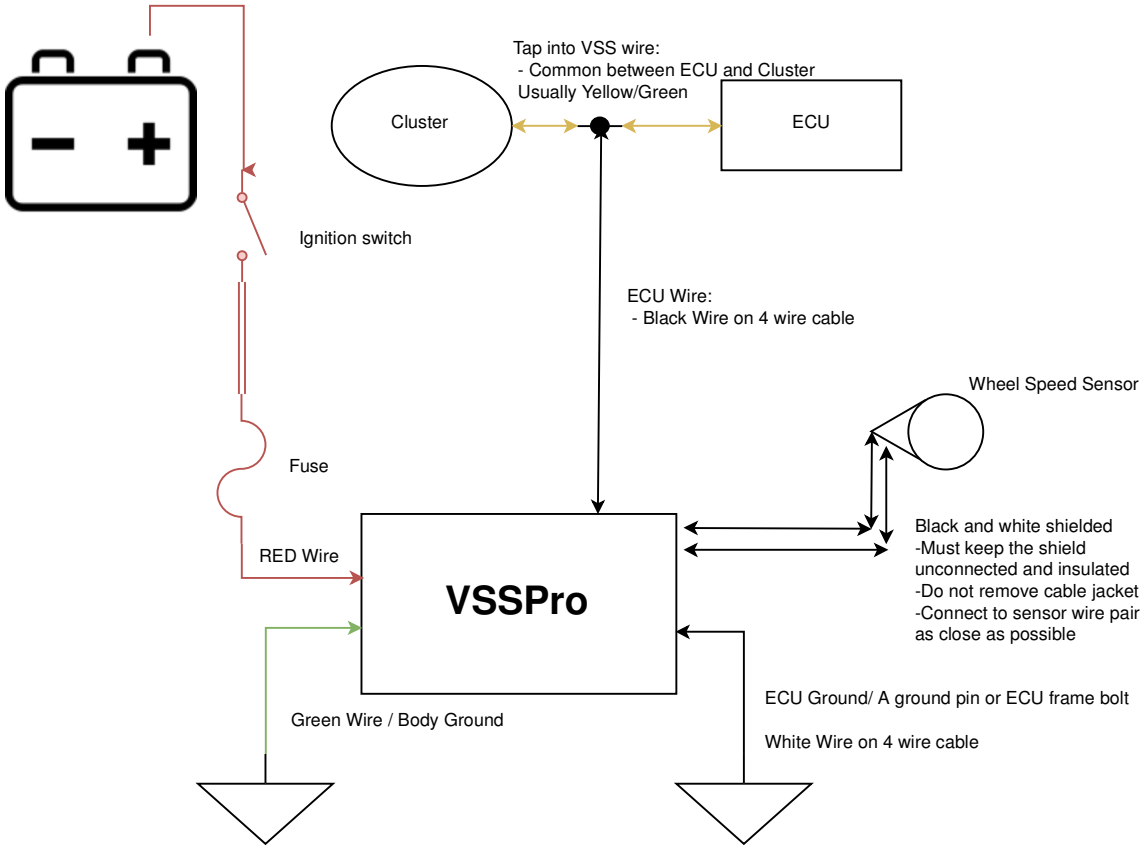
Tap into VSS wire:
- Common between ECU and Cluster
Usually Yellow/Green
Cluster
ECU
Ignition switch
ECU Wire:
- Black Wire on 4 wire cable
Wheel Speed Sensor
Fuse
RED Wire
VSSPro
Black and white shielded
-Must keep the shield
unconnected and insulated
-Do not remove cable jacket
-Connect to sensor wire pair
as close as possible
ECU Ground/ A ground pin or ECU frame bolt
Green Wire / Body Ground
White Wire on 4 wire cable